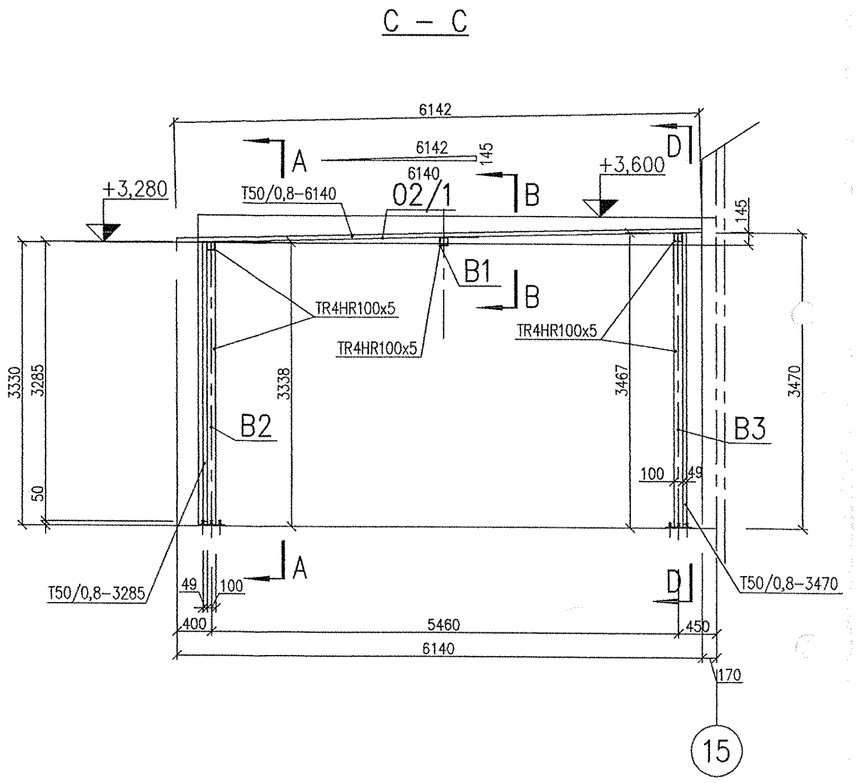

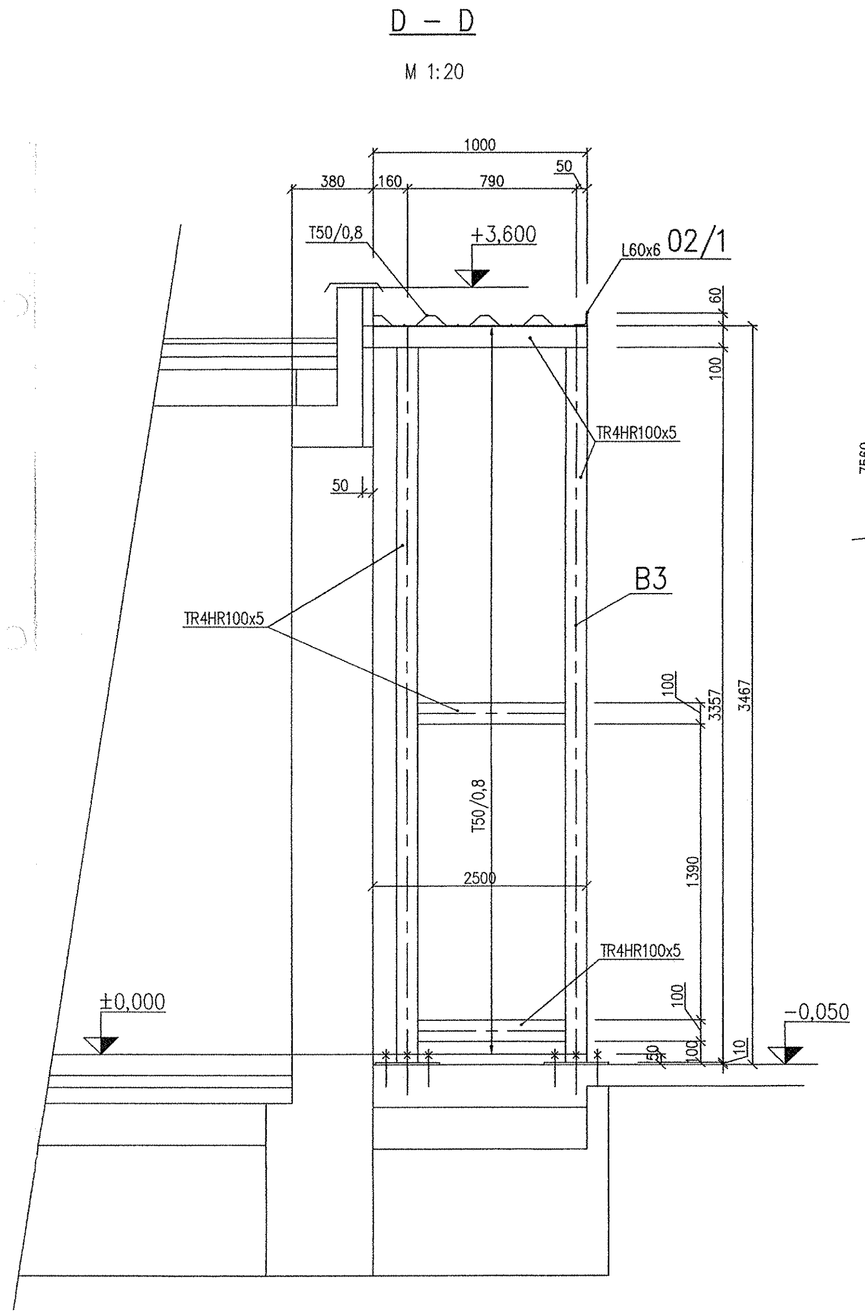

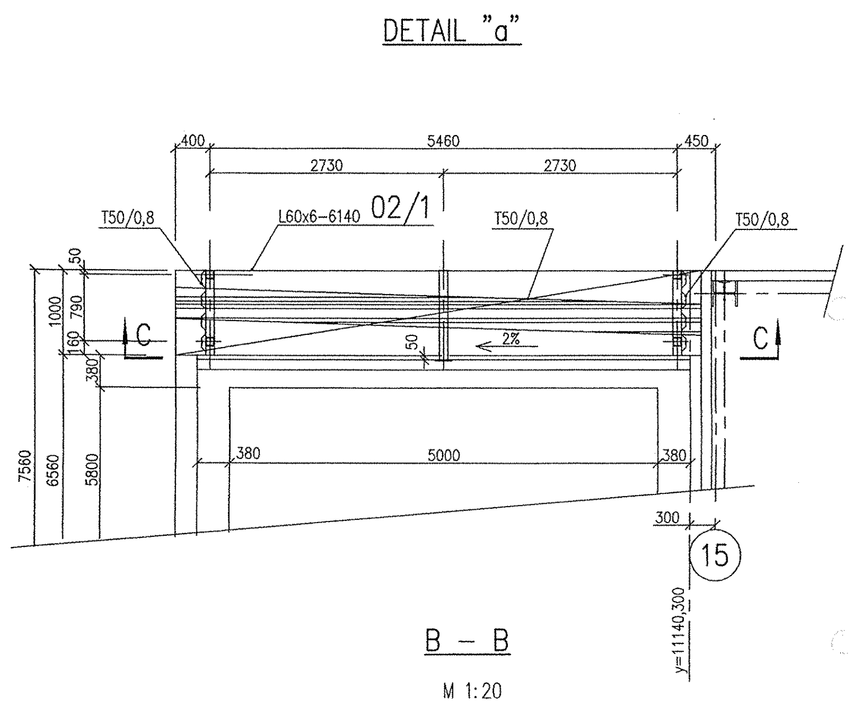

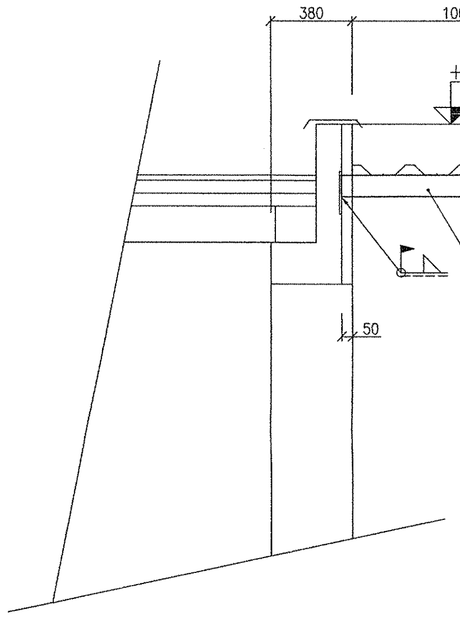

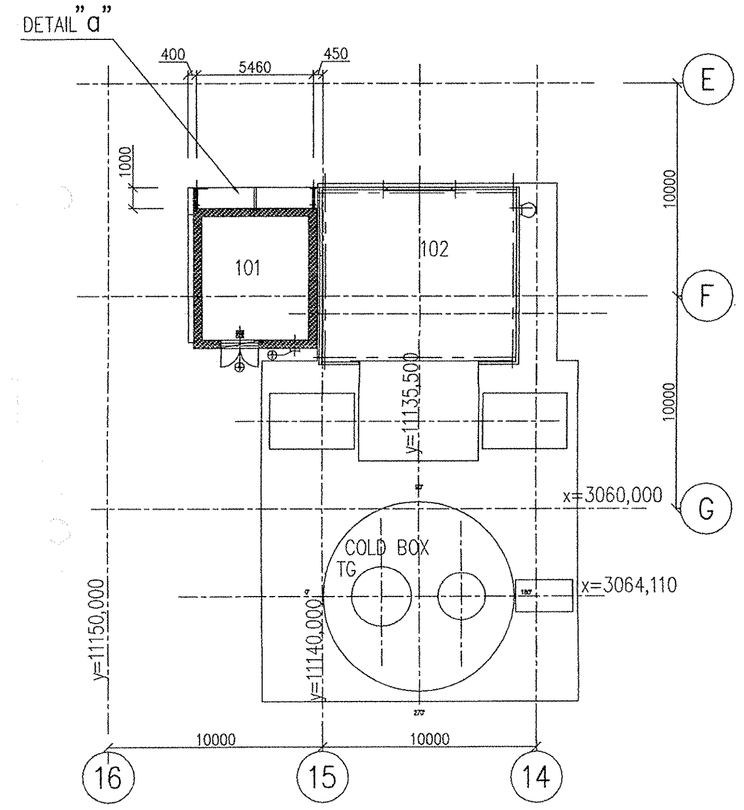

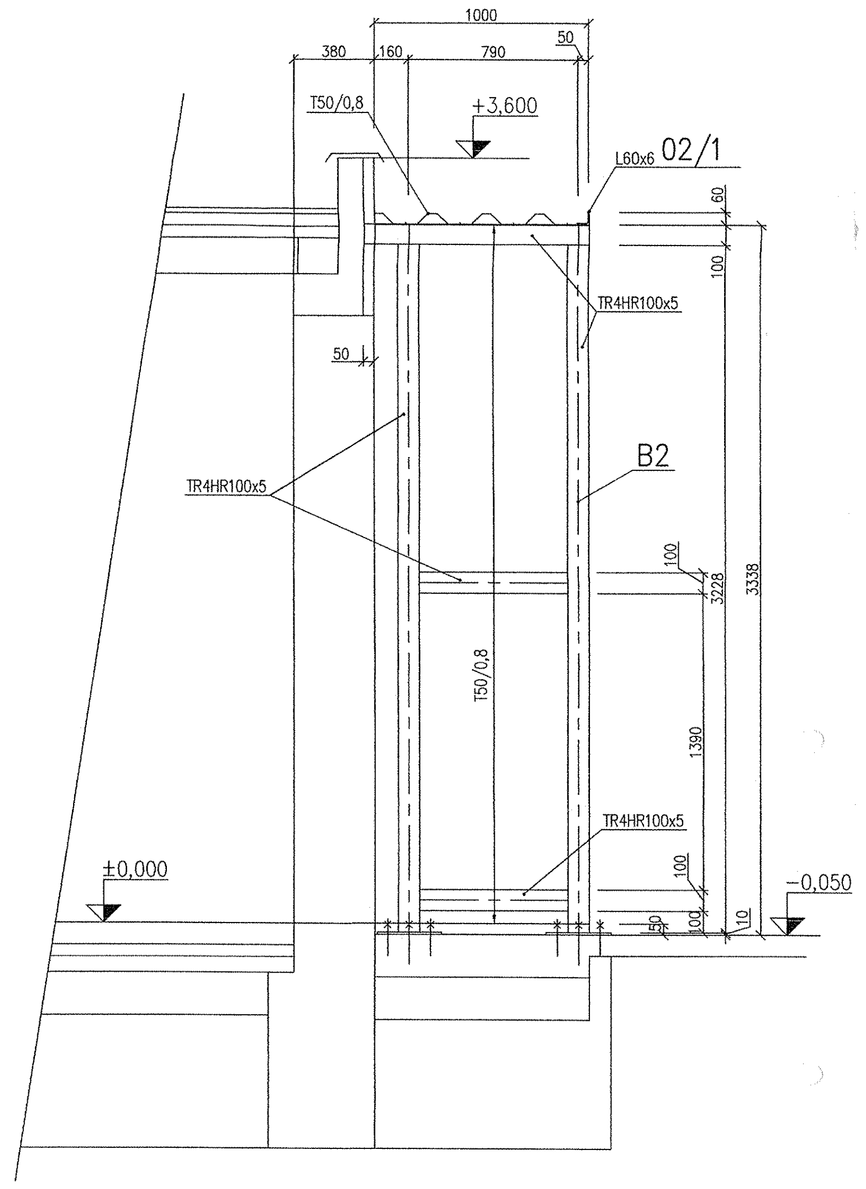

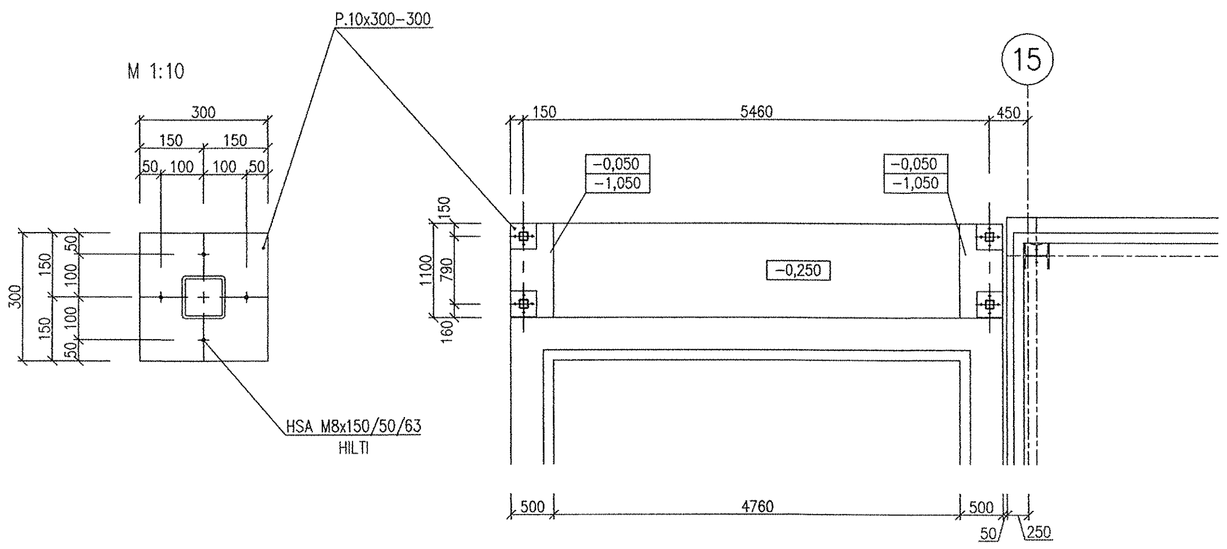

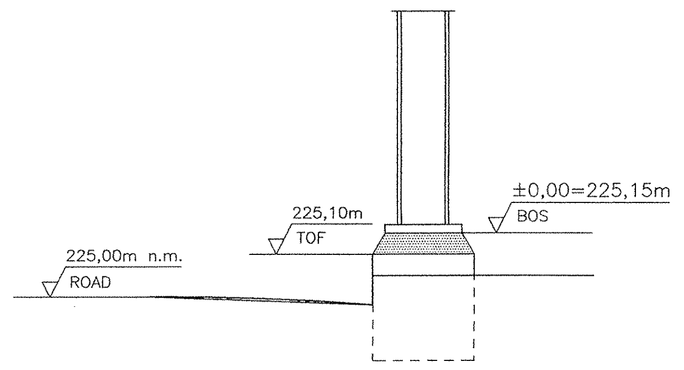

LEVELS

TOP OF INTERNAL ROADS:

TOP OF FOUNDATION:

BOTTOM OF STEEL STRUCTURE OR EQUIPMENT: 225,15m = ±0,00

PROJEKT SKUPINA VYHOTOVENIA

PLANT NORTH

35°

MONTÁŽNA ZOSTAVA

±0,000=225,15 m n. m. Jadran

PROJEKT PRE REALIZÁCIU STAVBY POD z. č. 3821.2.001.OK–02

HPK engineering a.s.	B			
	A			
	0	13.06.2005	ING.ĎURAŠKOVÁ	ING.PAVLIČKO	REAL.PROJ./CONSTRUCION DESIGN
	REV	DATE	NAME	CHECKED	HISTORY FILE

AIR LIQUIDE

JOB CODE: K70101

REFERENCE: ASU No.9 KOŠICE

SCALE 1:100

ORIGINAL FORMAT 8xA4

SHEET: 002 OF 003 SHEETS

REPLACES: 79_____

REPLACED BY: 79_-----

TITLE: UNIT 6 AIR SEPARATION–CONSTRUCTION DESING–BUILDING PART 1
SO 001 NÍZKOTEPLOTNÝ BLOK
SO 001 LOW TEMPERATURE BLOCK
OK PRE ANALYTICKÚ MIESTNOSŤ–STEEL STRUCTURE FOR ANALYTIC ROOM

DRAWING NO.: 792.87437

REV. 0

This drawing is protected by copyright. It may not be copied or used without our written authorization and it is strictly prohibited to disclose it to any third parties.